Backplate



Product Overview

Product	**Backplate**
Part No.	**45681-233**

Product Information

The Backplate provides a high degree of protection against the ingress of water into the back of the detector when mounted directly onto a mounting box. When the backplate is used with an XP95 or Discovery device, the number tab of the XPERT card must be snapped off and placed in one of the knock-out slots provided in the backplate.

- Protects against water ingress
- Improved performance
- Fits Series 65, XP95, Orbis and Discovery bases

Backplate dimensional drawing

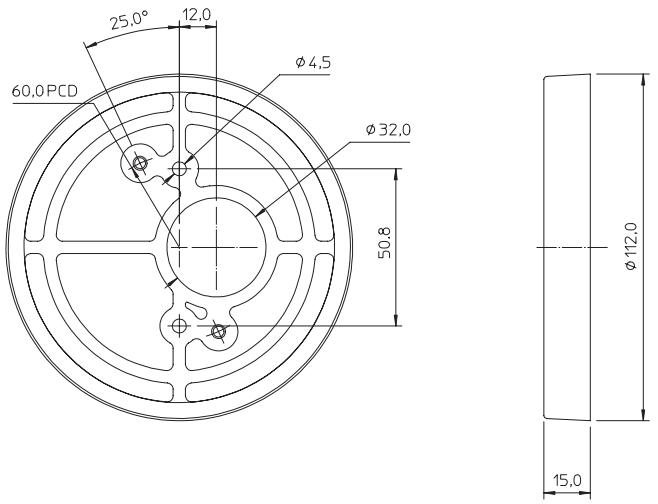

Base Cover



Product Overview

Product	**Series 65 Base Cover**
Part No.	**45681-370**
Product	**XP95 Base Cover**
Part No.	**45681-380**

Product Information

Base covers are available as part of the Series 65, Discovery, and XP95 ranges.

- Protects base when the detector is not in place
- Aesthetically pleasing

Base cover dimensional drawing

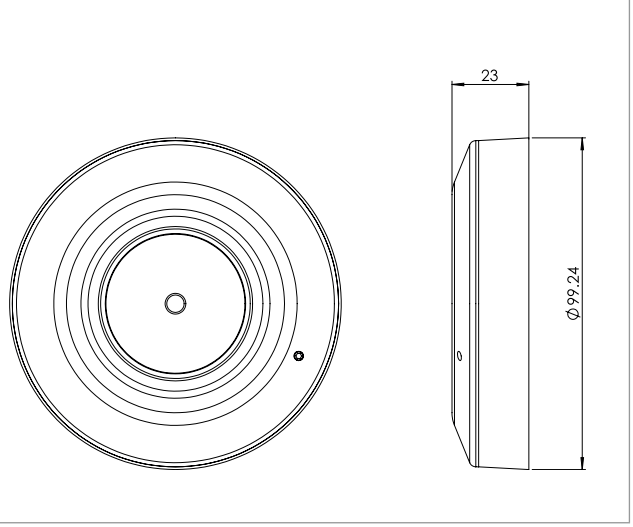

36 Brookside Road, Havant
Hampshire, PO9 1JR, UK.
Tel: +44 (0)23 9249 2412
Fax: +44 (0)23 9249 2754
Email: sales@apollo-fire.com
Web: www.apollo-fire.co.uk

A HALMA COMPANY
©Apollo Fire Detectors Ltd 2017

Conduit Box



Product Overview

Product	**Conduit Box**
Part No.	**45681-204**

Product Information

The Conduit Box is a versatile accessory for surface mounting Apollo bases. The box has knock-outs to accept PG16 or M20 cable glands, conduit or mini-trunking. Self-tapping screws are included to fit the detector base to the conduit box.

- **Easy to install**
- **Aesthetically pleasing**
- **Colour matched to detector and base**

Conduit Box dimensional drawing

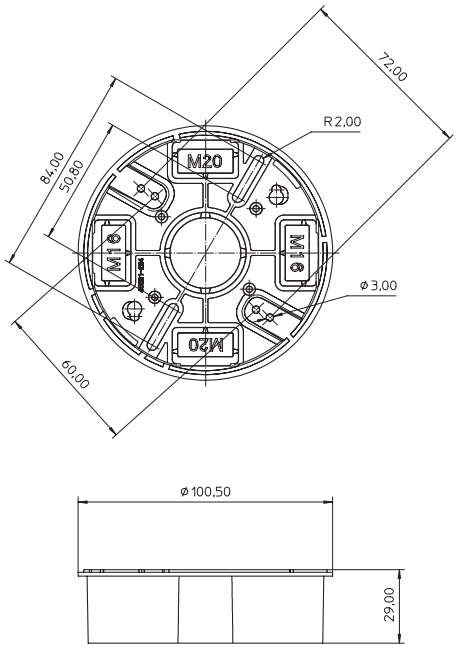

Sounder Ceiling Plate



Product Overview

Product	**Sounder Ceiling Plate**
Part No.	**45681-311**

Product Information

The Sounder Ceiling Plate enables surface mounted cabling to be fitted to a loop-powered sounder base.

- **Easy to install**

Sounder ceiling plate dimensional drawing

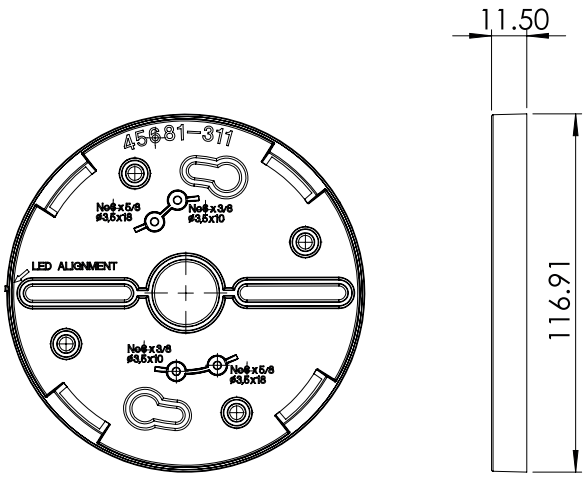

Module Base



Product Overview

Product	**Module Base**
Part No.	**38531-822**

Product Information

The Module Base is an accessory which can be secured to a standard base enabling customers to fit their own electronics.

- 5 mm in depth

Ceiling Tile Mounting Box



Product Overview

Product	**Detector Ceiling Tile Mounting Box**
Part No.	**45681-309**
Product	**Sounder Ceiling Tile Mounting Box**
Part No.	**45681-310**

Product Information

The Ceiling Tile Mounting Box has been designed to make the installation of detectors and sounders quick and easy prior to the fitting of a false ceiling. Detector and Sounder bases can be fitted, wired and if necessary, tested and commissioned before the installation of a false ceiling.

- No need for a separate back box
- Can be used with tiles up to 25 mm thick
- Quick and easy installation

Module base dimensional drawing

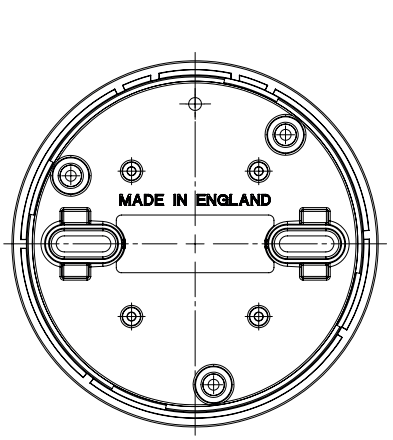

Ceiling tile mounting box dimensional drawing

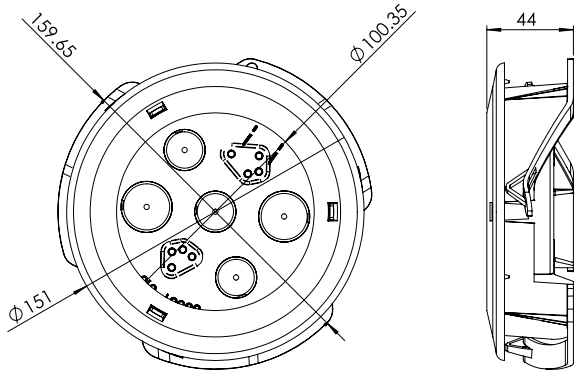

Deckhead Mounting Box



Product Overview

Product	**Deckhead Mounting Box**
Part No.	**45681-217**
Product	**Metal Deckhead Mounting Box to fit PG16 glands**
Part No.	**29600-131**
Product	**Deckhead Mounting Box Accessory Kit**
Part No.	**45681-218**
Product	**Metal Deckhead Mounting Box to fit M20 components**
Part No.	**29600-139**
Product	**'O' ring**
Part No.	**31523-857**

Product Information

The Deckhead Mounting Box gives extra protection to devices to be fitted in areas where there is a possibility of moisture or condensation ingressing through the rear of the base.

- Protects against water ingress
- Improved performance
- Available in polycarbonate or metal
- Polycarbonate base can be used with Apollo Audio Visual devices when used with the Accessory Kit

Deckhead Mounting Box dimensional drawing

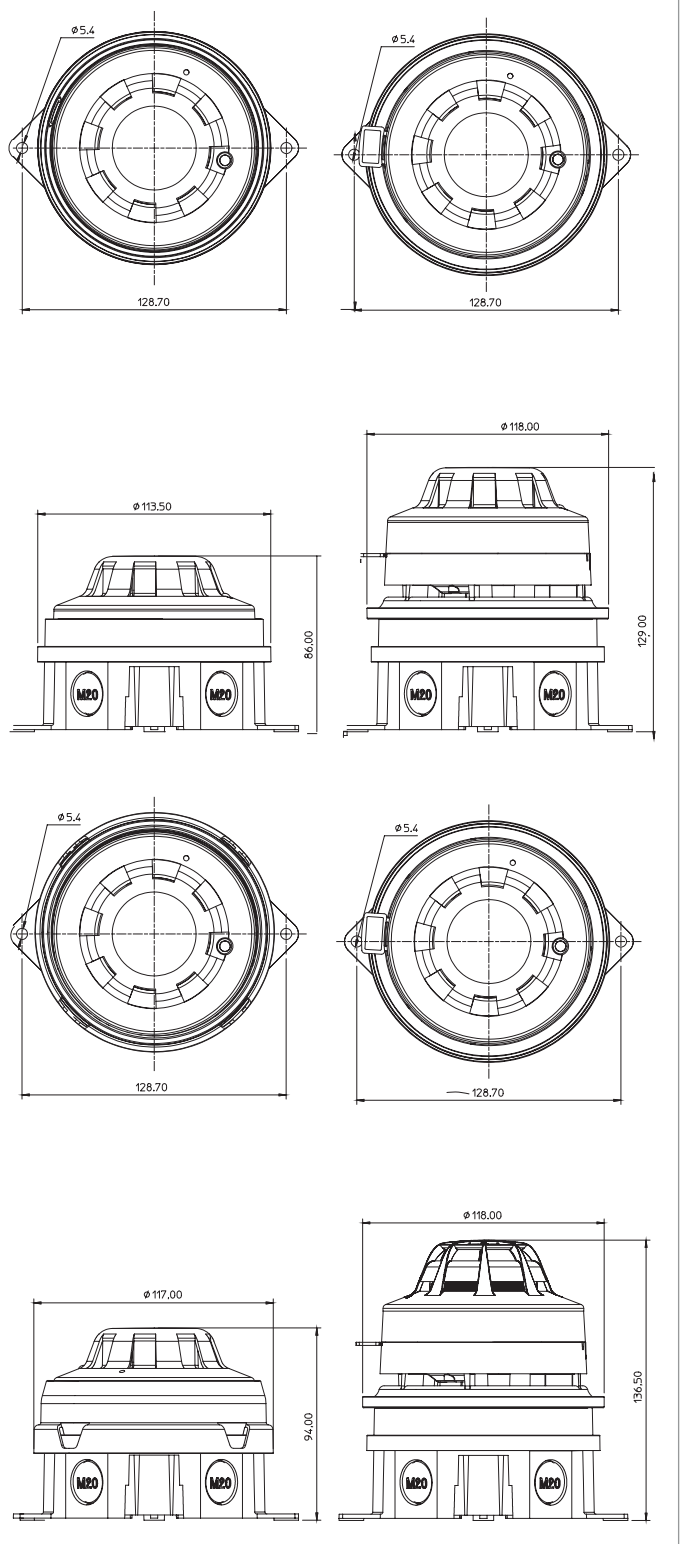

Note: *The XP95 and Discovery detectors are shown for illustrative purposes only and are avaiable as separate items.*

6“ Mounting Plate

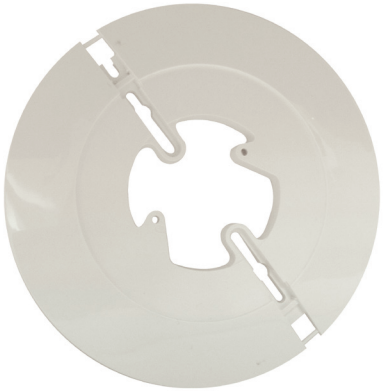

Product Overview

Product	**6” Mounting Plate**
Part No.	**45681-600**

Product Information

The 6” Mounting Plate is an accessory that enables sounder bases to be surface mounted.

- Can be surface mounted
- Aesthetically pleasing
- Disguises any blemishes or marks left beneath

Visual Indicator Enclosure



Product Overview

Product	**Visual Indicator Enclosure**
Part No.	**29600-318**

Product Information

The Visual Indicator Enclosure is weatherproof enabling a loop-powered visual indicator to be installed outside and in high moisture environments such as swimming pools. The enclosure is supplied with a mounting bracket to accept a Discovery or XP95 base.

- Protects against water ingress
- Enables a visual indicator to be used outdoors
- Accepts a MiniDisc remote indicator
- IP67 rated

Series 90 to XP95 Base Adapter

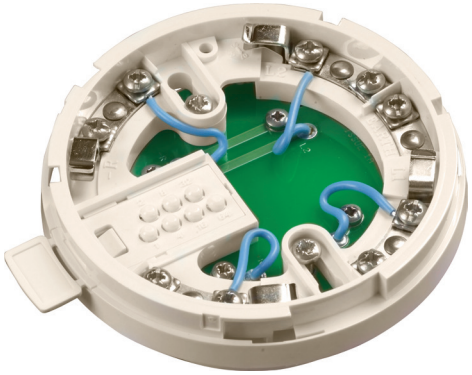

Product Overview

Product	**Series 90 to XP95 Base Adapter**
Part No.	**45681-238**

Product Information

The Series 90 to XP95 Base Adapter enables XP95 detectors to be fitted to an existing Series 90 base. The adapter eliminates the need to rewire an existing Apollo intelligent system.

- Enables an existing range to be updated with ease
- Eliminates the need for re-wiring

Series 65 to Orbis Base Adapter



Product Overview

Product	**Series 65 to Orbis Base Adapter**
Part No.	**ORB-BA-10008-APO**

Product Information

The Series 65 to Orbis Base Adapter enables Orbis detectors to be fitted to an existing Series 65 base. The adapter eliminates the need to rewire an existing Apollo conventional system.

- Enables an existing range to be updated with ease
- Eliminates the need for re-wiring

Base Mounted Flame Detector Bracket



Product Overview	
Product	**Base Mounted Flame Detector Bracket**
Part No.	**29600-458**

Product Information

The Base Mounted Flame Detector Bracket includes an adjustable bracket and Deckhead Mounting Box. The internal mounting base shown in the picture is sold separately.

This page has intentionally been left blank